Parts Catalogue

Thoma
Holz100 Canada

Contents

Thoma
Holz100 Canada

Our Beliefs

- **to build the best houses with wood**
- **to constantly research and learn**
- **to provide unconventional quality jobs**
- **to value and respect nature in handling forests and wood, a renewable raw material**

Our mission statement

We are mindful of people and the environment.

We provide valuable benefits by building the safest, healthiest and most sustainable housing made of renewable wood. At the same time, they enable the best values in new building technology (soundproofing, fire safety, radiation shielding, earthquake safety, thermal insulation, etc.) resulting in the best building quality for biological living environment and health for all residents.

Our secret is building consistently with 100% pure solid wood in walls, roofs and ceilings. Research and education regarding Holz100 is far above the industry average with state-of-the-art production machinery and our own manufacturing in the regions.

We are the manufacturer of solid wood house systems. We share the value added from sales, installation and expansion with local partners on site.

We aim for significant sales to cut costs and achieve a fair price.

For us, marketing means objective information and development of responsible customers. Employees in our network are all looked after in our partnerships.

Social responsibility for employees puts the company above legal standards. The remuneration is performance-oriented.

For us, these are especially important values:

- **Respect and joy towards the creation of the trees we harvest**
- **Openness and collaboration in the management towards our employees and customers**
- **Honesty and loyalty of employees to their companies**
- **Technical and commercial independence of each partnering company**

For strategic decisions, the organic processes of nature serve as a model. Through our work, our customers can build better, healthier, and sustainable homes for generations.

1. System Thoma Holz100

Description of main systems:

W	**Wall Systems**
DE	**Ceiling Systems**
DA	**Roof Systems**

Thoma Holz100 – One System – A Complete Building Frame

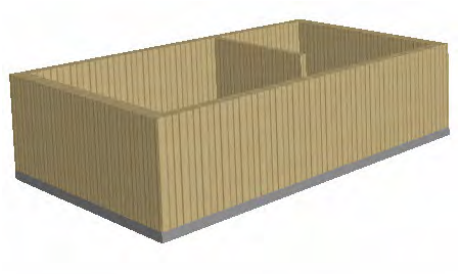

Holz100 Wall Systems (W)

Holz100 Standard
Holz100 Thermal
Holz100 Soundproofing

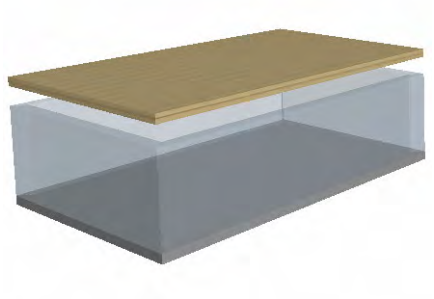

Holz100 Ceiling Systems (DE)

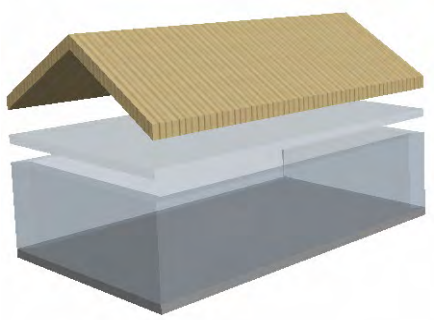

Holz100 Roof Systems (DA)

assemble into an "inhabitable" bare shell.

<u>Assembly time for a single family house</u>
(approx. 150m² of living space)
<u>= 1 DAY</u>

Parts Catalogue

1.1 Wall System H100 - W

Holz100 Standard Wall

Types of Wood: Spruce / Fir / Pine / Larch
Dowels: Dust-dried Beech (hardwood)

The Thoma Holz100 Standard parts consist of layers of wooden boards with a thickness of 20mm to 60mm, which are cross laminated (horizontally, vertically and diagonally) both outside and inside, and connected to a standing core or to a top and bottom belt of 40 or 80mm with beech wood dowels (approx. d=20mm) which are set as a raster.

The external walls are fitted at the factory with one layer of house wrap which is securely placed between two layers of boards. The mechanically compressed and dust-dry hardwood dowels are hydraulically pressed in, they get moist in the process by absorbing additional ambient humidity, and swell up to connect non-detachably to surrounding wood.

Synthetic resin glues or nails are not being used, so that the result is a solid wood wall (up to 3 x 8m in size, and up to 40cm thick), which contains nothing but pure wood.

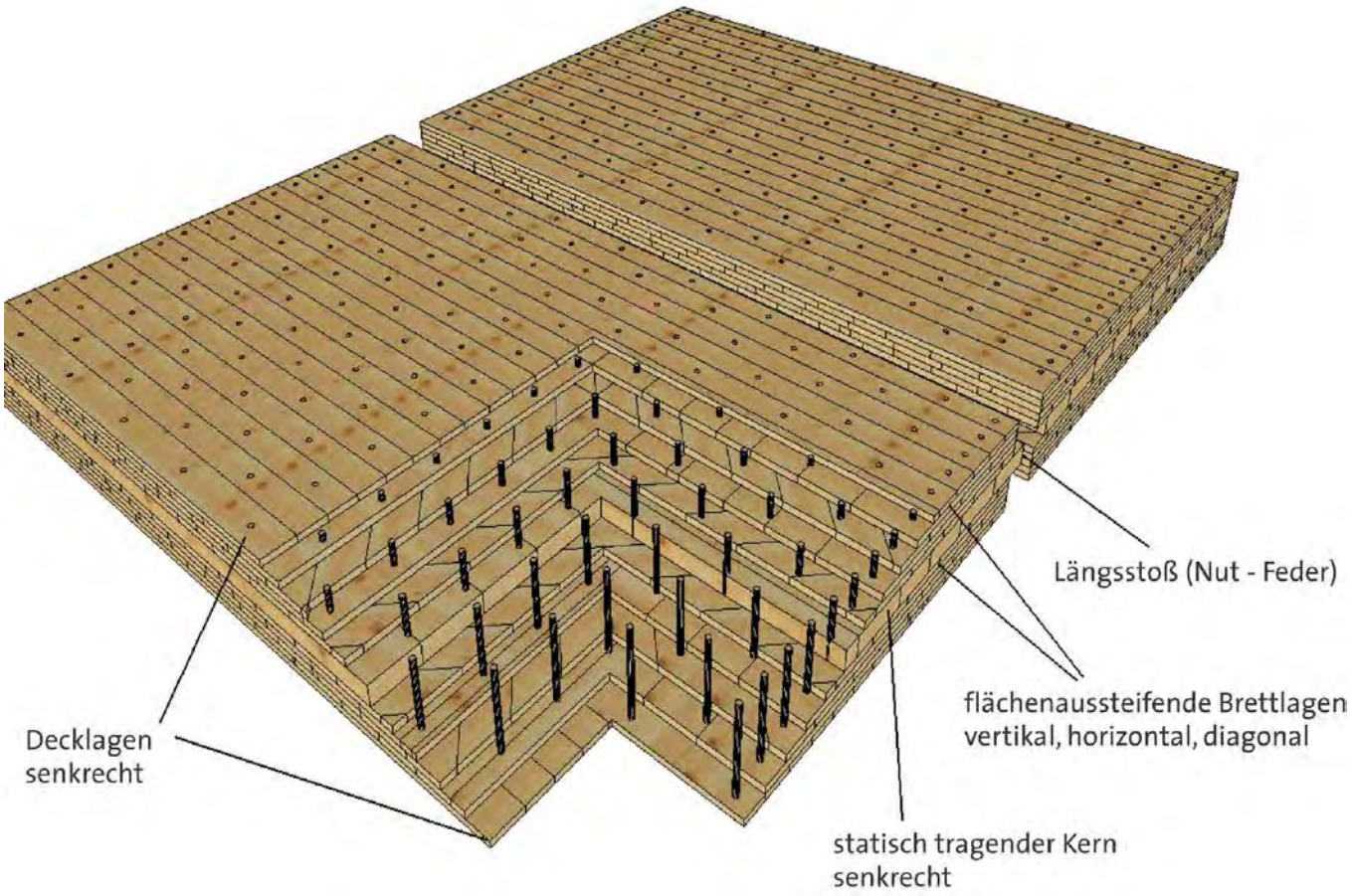

Parts Catalogue

Holz100 Thermal Walls

The Thoma Holz100 Thermal walls - similar to standard walls - consist of layers of wooden boards with a thickness of 20mm to 80mm. What's different are the grooves milled into individual layers of wood. The grooves milled into the layers of wood (integrated structural insulation) function within the Holz100 wall laminate as macroscopic air cushions without circulation, and reduce the wall's thermal conductivity which results in a substantially improved thermal insulation.

At their full static load carrying capacity, the Holz100 Thermal walls show parameters otherwise reserved solely to insulation materials. The Thermal walls are manufactured in the following thickness versions:

- 25.0cm type W25
- 30.6cm type W30
- 36.4cm type W36

The Thoma Holz100 Thermal walls make it possible for external walls to have a very high energy standard with only a little additional thickness for insulation. Our research work combines excellent technical parameters with a background of building-specific physical properties, which not least minimize the building cost.

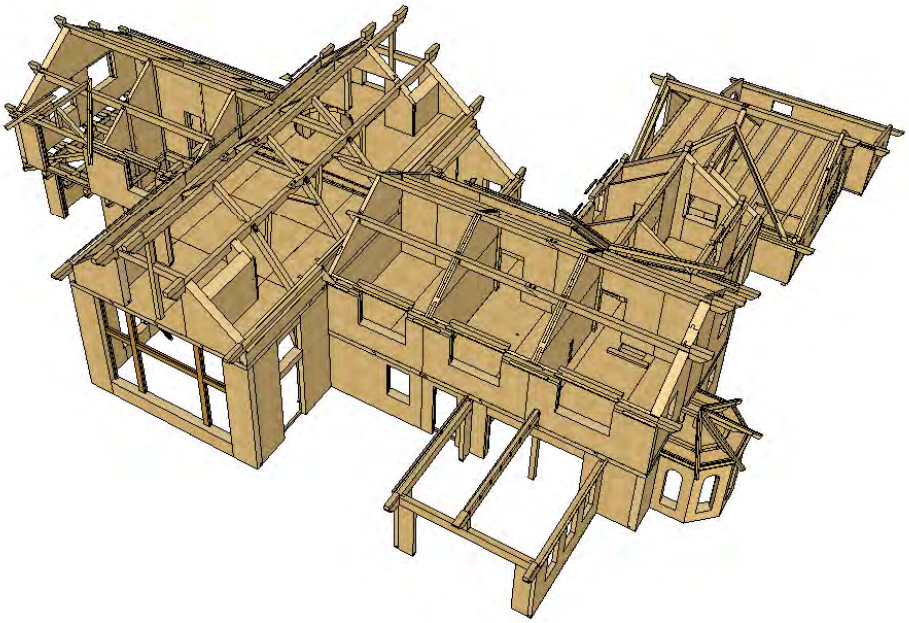

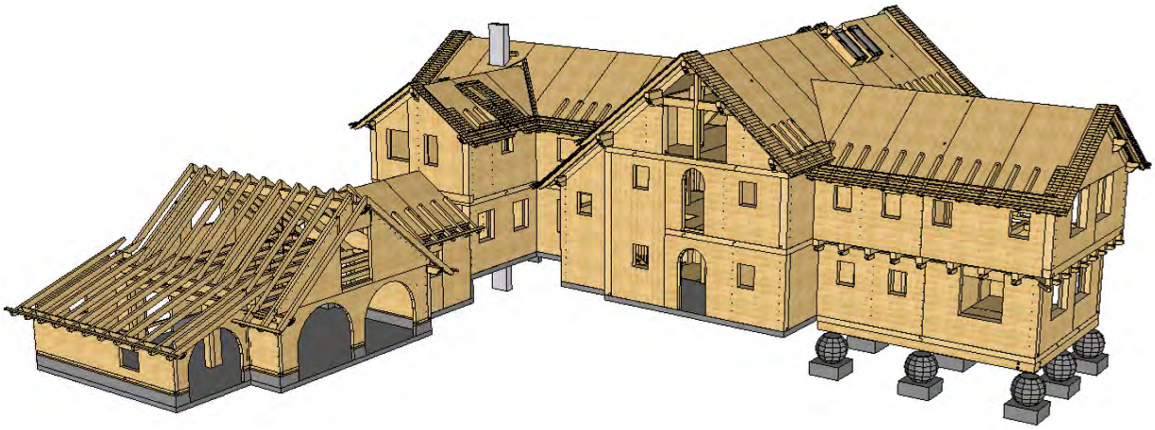

Table of Technical Data

Feature	Value	Certified institution / detail
Type of Wood	Spruce and Fir	Other type of wood available on request
Core Layer	2 - 8 cm thick	Dried and graded
Strength	C24 (=S10) and max. 30% C16 (=S7)	ETA - 13/0785
Moisture Content	12% (+/- 2%)	In manufacturing process
Maximum Size	L = 8 m, B = 3 m, D = 0.40 m	Specialized designs are possible
Density	450 kg/m³ and 5.0 kN/m³	Density: for transport weight Weight: Table Value according to EN 1991-1-1 for static calculations
Thermal Conductivity	λ = 0,079 - 0,12 W/(m*K)	Values according to test and standards
Heat Capacity	cp = 1.6 kJ/(kg*K)	EN ISO 10456
Diffusion Resistance	μ = 37	Values according to test and standards
Air Permeability	Class 4 according to EN 12207	Values according to test reports. Connection, forehead, etc. must be sealed properly
Fire Performance	Class D-s2 d0	Table value according to EN 13501-1
Fire Resistance, H100-W17	REI 60 according to EN 13501-2	Value according to test reports
Fire Resistance, H100-W36	REI 120 (EN 13501-2)	Value according to reports
Burning Rate	0.7 mm/min	Table value according to EN 1995-1-2

Surface

Nature

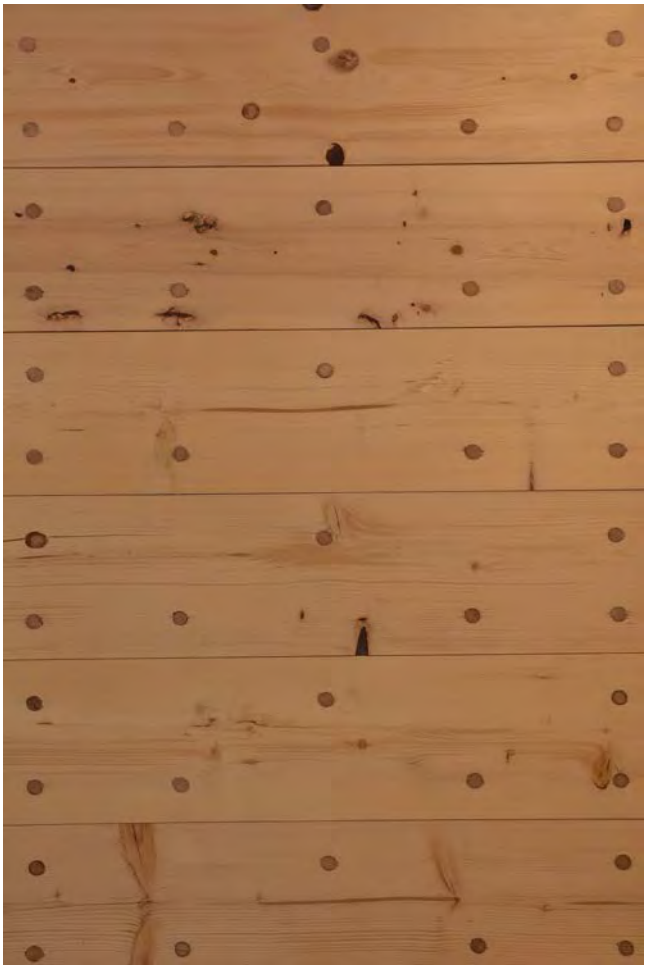

Sorted

For the "Sorted" surface variant, the decking boards made of spruce and fir wood are sorted by hand. Knotholes, branch fissures and resin pockets are practically excluded or repaired by branch patches (branch caps) and boat patches.

Further optional surfaces:

- Polished surface Fi/Ta
- Dowel free surface Fi/Ta
- Pine covered layer

1) Inner Wall System

H100-W12

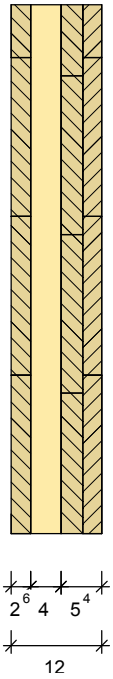

General Data

Thickness	**12.0 cm**
Functionality	**Inner wall, not supporting**
Core	**40 mm**
Surface Layer	**horizontal**
Construction	**4 layers**
Layers, left to right	**h - K - d - h**
Area Density	**approx. 55 kg/m²**

H100-W14

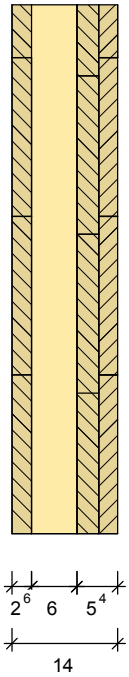

General Data

Thickness	**14.0 cm**
Functionality	**Inner wall, supporting**
Core Layer	**60 mm**
Surface Layer	**horizontal**
Construction	**4 layers**
Layers, left to right	**h - K - d - h**
Area Density	**65 kg/m²**
Soundproofing	**Rw = 39 dB**

2) Outer Wall System

The surface layers of outer walls can be mounted horizontally (h) or vertically (v). For example for the H100-W17:

- **H100-W17/ v (for vertical surface layers)**
- **H100-W17/ h (for horizontal surface layers)**

H100-W17

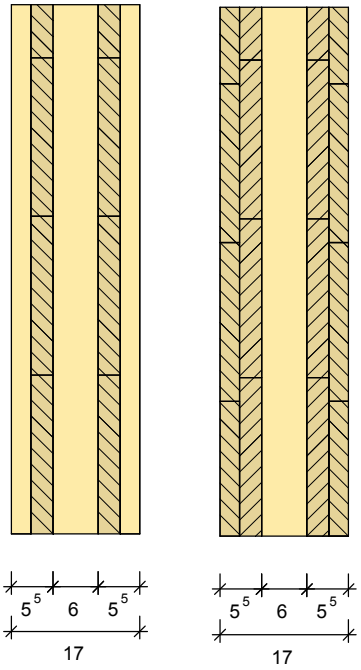

General Data

Thickness	**17.0 cm**
Functionality	**Outer wall**
Core Layer	**60 mm**
Surface Layer	**Horizontal or vertical**
Construction	**5 Layers**
Layers, left to right	
H100-W17v	**v - h - K - d - v**
H100-W17h	**h - v - K - d - h**
Area Density	**74 kg/m²**
Fire Protection	**REI 60**

H100-W20

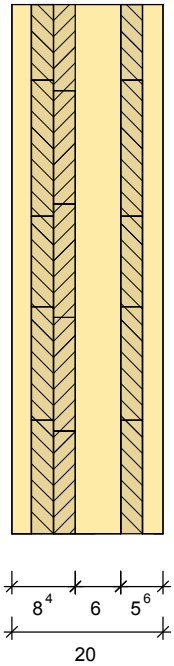

General Data

Thickness	**20.0 cm**
Functionality	**Outer wall**
Core Layer	**60 mm**
Surface Layer	**Horizontal or vertical**
Construction	**6 Layers**
Layers, left to right	**v - h - d - K - d - v**
Area Density	**90 kg/m**
Soundproofing	**Rw = 41 dB**

H100-W25

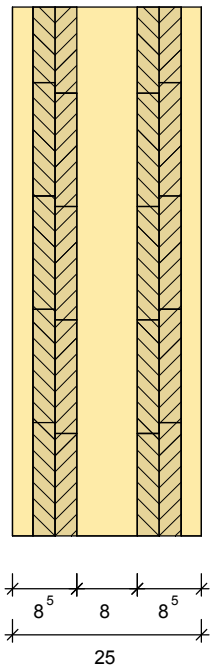

General Data

Thickness	**25.0 cm**
Functionality	**Outer wall**
Core Layer	**80 mm**
Surface Layer	**Horizontal or vertical**
Construction	**7 layers**
Layers, left to right:	**v - h - d - K - d - h - v**
Area Density	**109 kg/m²**

H100-W30

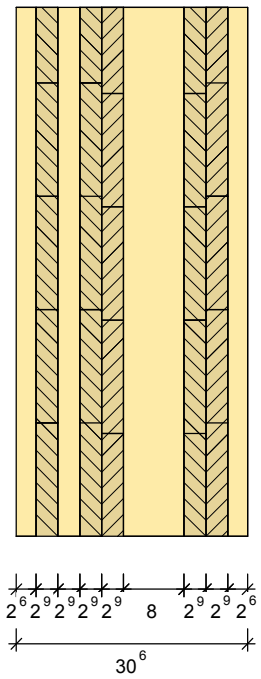

General Data

Thickness	**30.6 cm**
Functionality	**Outer wall**
Core Layer	**80 mm**
Surface Layer	**Horizontal or vertical**
Construction	**9 Layers**
Layers, left to right:	**v - h - v - h - d - K - d - h - v**
Area Density	**134 kg/m²**

H100-W36

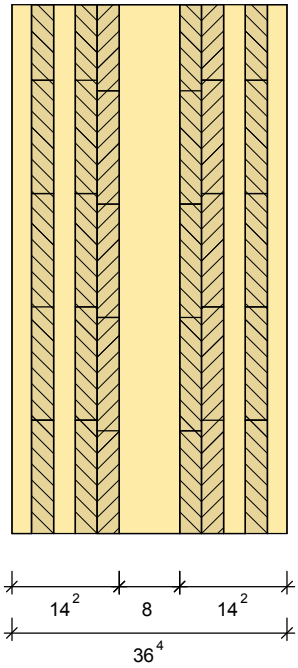

General Data

Thickness	**36.4 cm**
Functionality	**Outer wall**
Core Layer	**80 mm**
Surface Layer	**Horizontal or vertical**
Construction	**11 layers**
Layers, left to right:	**v - h - v - h - d - k - d - h - v - h - v**
Area Density	159 kg/m^2
Fire Protection	REI 120

3) Soundproofing

H100-W32-Sound

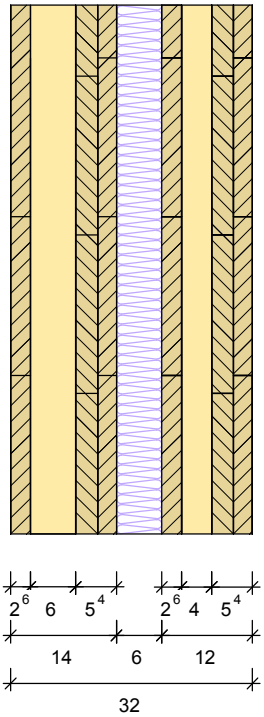

General Data

Thickness	**32.0 cm**
Functionality	**Partition wall**
Layers	**3**
Construction	**14 cm H100 | 6 cm HW | 12 cm H100**
Isolated By:	**6 cm Softwood Fire Plate**
Area Density	**123 kg/m**
Soundproofing	**Rw = 54 dB**
Airborne Sound Insulation with one-sided attachment	**Rw = 63 dB**

1.2 Ceiling System H100-DE and Roof System H100-DA

Thoma Holz100 ceilings and roof parts consist of 70-80 mm walers and wooden board layers in between.

Fitting direction: single-axis towards walers **Type of wood: Spruce | Fir | Pine | Larch**

H100-DE17/DA17

Cross-section

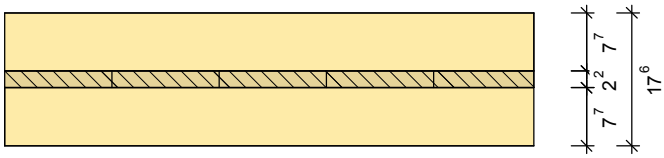

General Data

Thickness	**17.6 cm**
Layers	**3**
Top and bottom waler	**7.7 cm**

H100-DE21/DA21

Cross-section

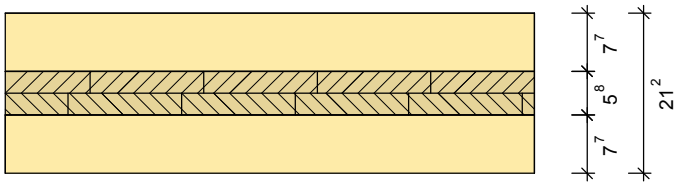

General Data

Thickness	**21.2 cm**
Layers	**4**
Top and bottom waler	**7.7 cm**

Thoma Holz100 Canada

2. Details

2.1 Standard Connections

1) Corner Connection

Version: unrebated

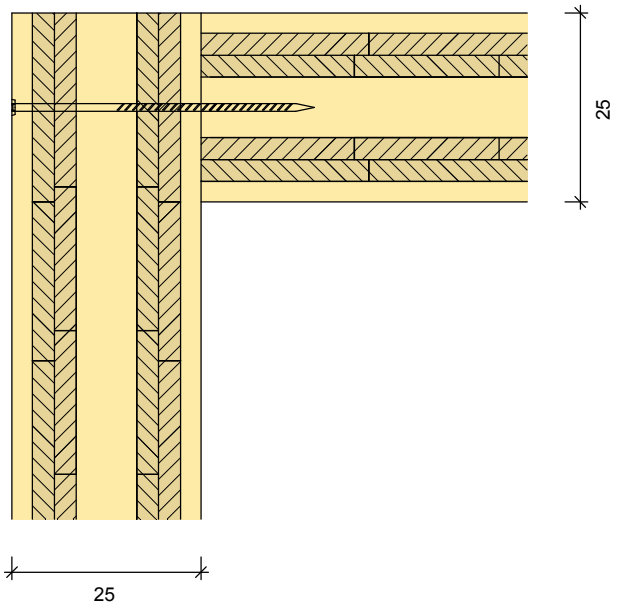

Screw connections with Torx, screw size according to static requirement.

Version: rebated

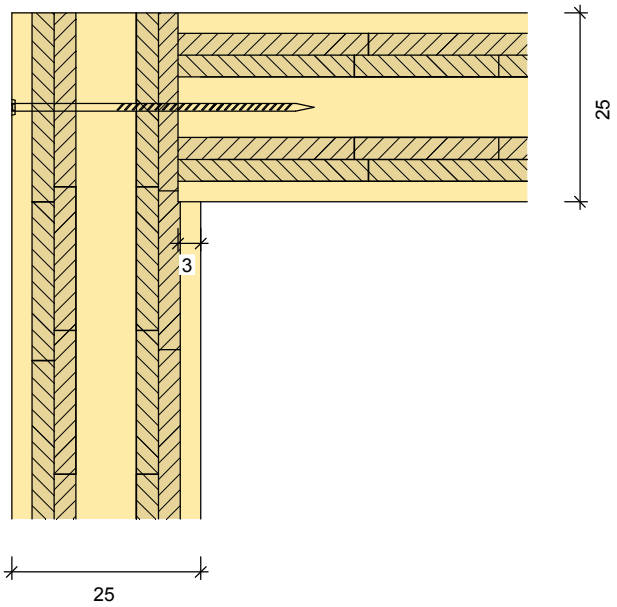

2) Joining of Partition Walls

Version: unrebated

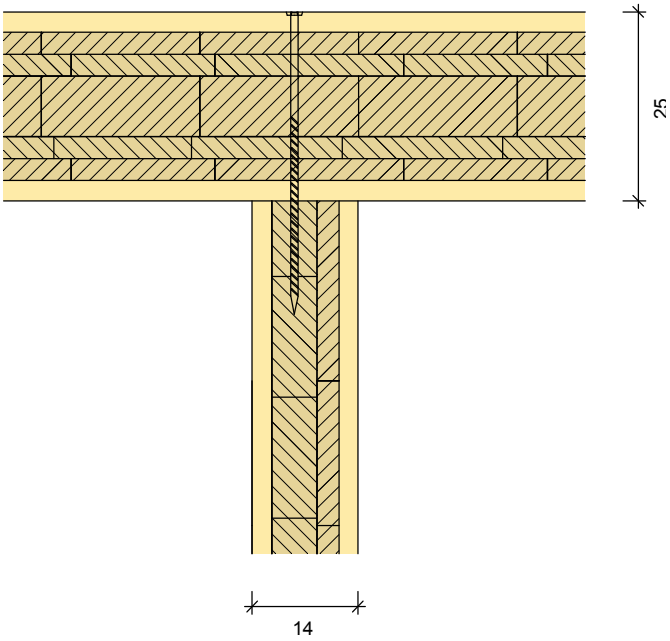

Screw connection with Torx, Screw size according to static requirement

Version: rebated

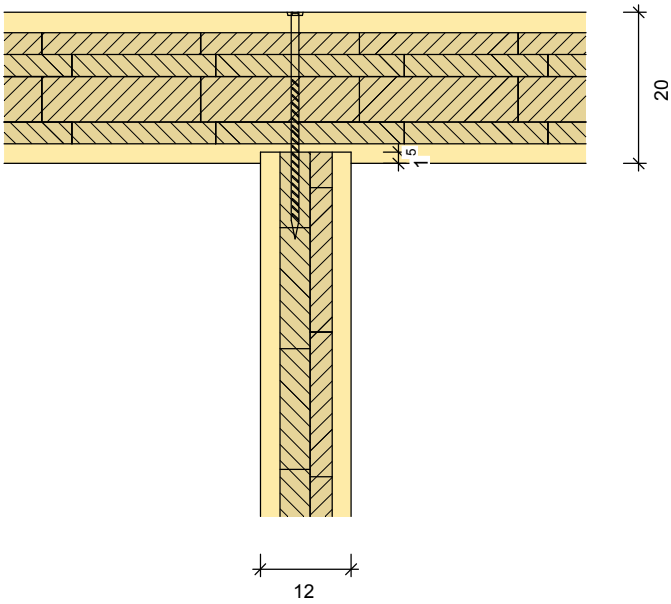

3) Horizontal Section

Connection: Open

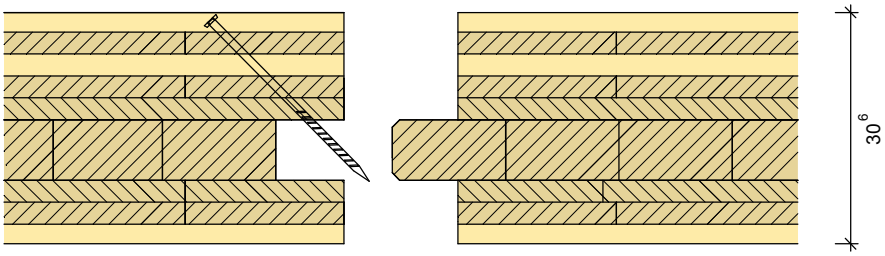

Connection: Closed

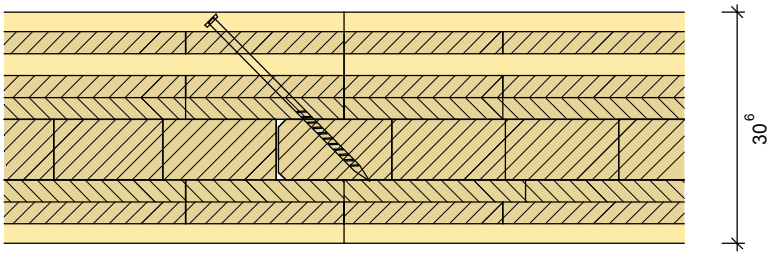

Parts Catalogue

3) Joining ceilings edge-to-edge

Horizontal section

Connection: Open

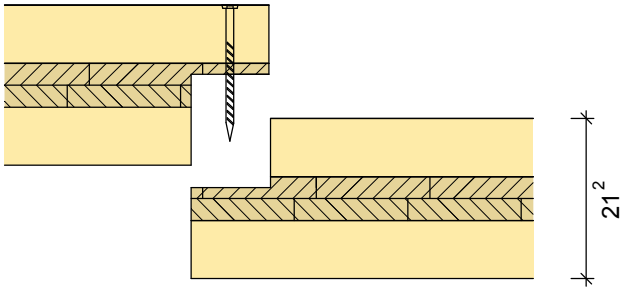

Connection: Closed

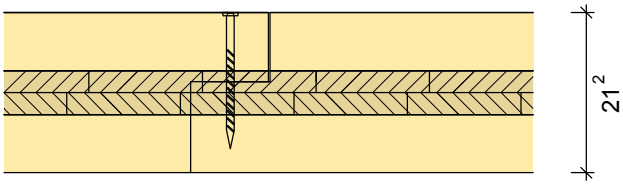

2.2 Other Connections

1) External walls to concrete

Thoma External Wall H100-W17

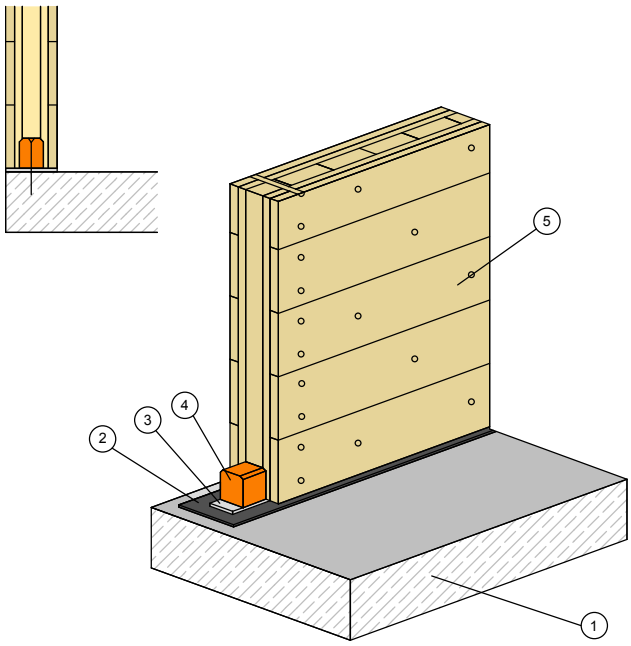

Description of Layers

1 Floor plate | foundation
2 Insulation against rising damp
3 Mortar bed precisely leveled supporting blocks
4 Holz100 mounting joist (larch) anchoring via heavy duty anchor to the floor plate-dissipation of vertical forces, secured in position by screwing the Holz100 wall to the mounting joist from the outside.
5 Thoma Holz100 Wall System, supporting according to static and building-physics requirements.

Thoma External Wall H100-W30

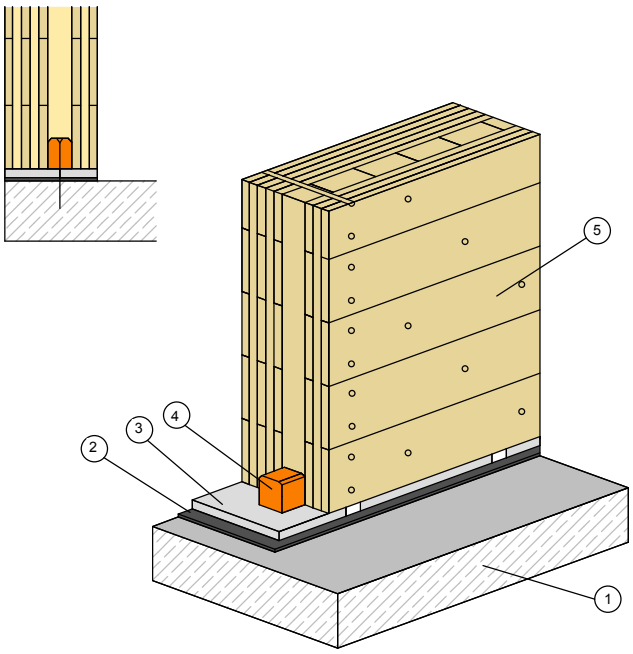

Description of Layers

1 Floor plate | foundation
2 Insulation against rising damp
3 Mortar bed
4 Holz100 mounting joist (larch) anchoring via heavy duty anchor to the floor plate-dissipation of vertical forces, secured in position.
5 Thoma Holz100 Wall System, supporting according to static and building-physics requirements.

2) Internal Wall to Concrete

Version: with elbow connector

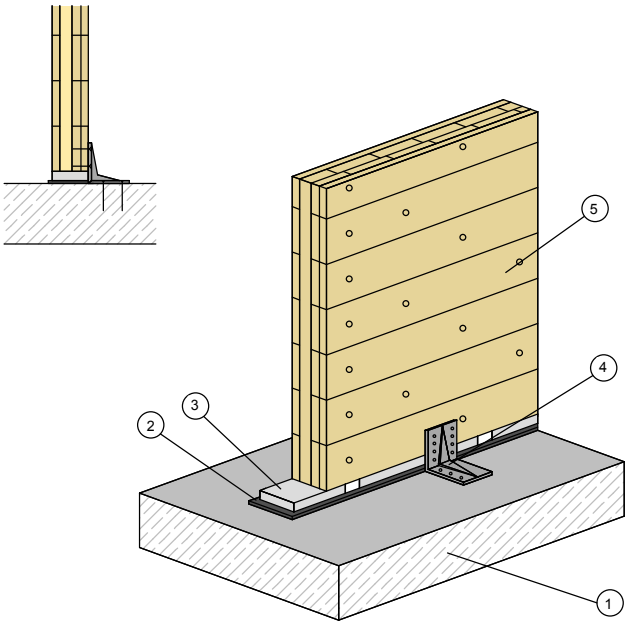

Description of Layers

1 Floor plate | Foundation
2 Insulation against rising damp
3 Mortar bed precisely leveled, supporting blocks

Stabilizer

4 Connected via BMF elbow connector for securing in position
5 Thoma Holz100 Wall System

Version: with Thoma mounting joist

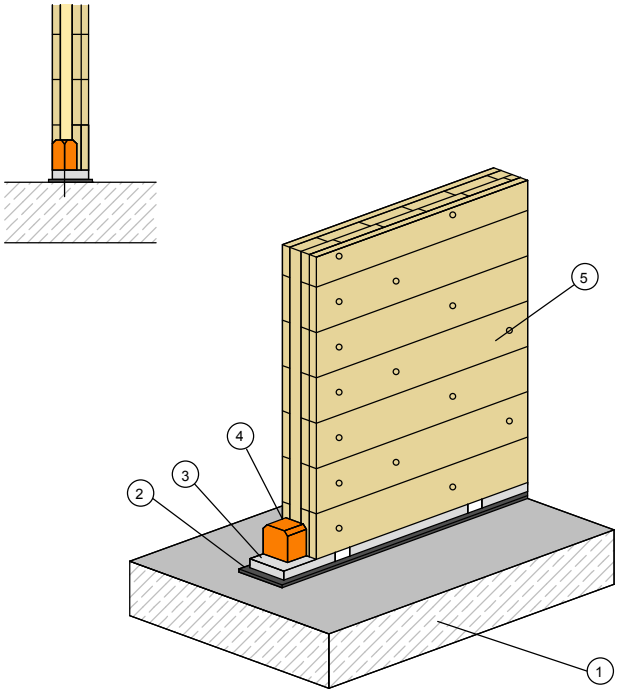

Description of Layers

1 Floor plate | Foundation
2 Insulation against rising damp
3 Mortar bed precisely leveled, supporting blocks
4 Holz100 mounting joist (larch) anchoring via heavy duty anchor to the floor plate- dissipation of vertical forces, secured in position.
5 Thoma Holz100 Wall System

3) Joining to the floor plate

Version: crawl space with a Holz100 ceiling

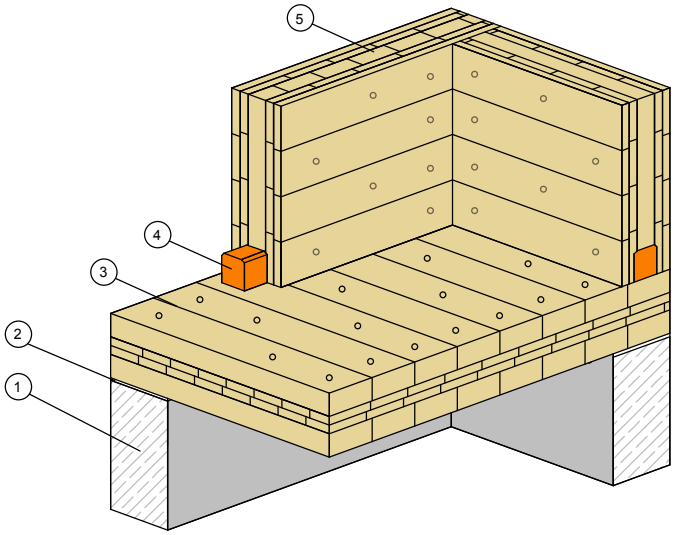

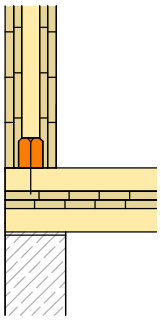

1 Crawl space with sufficient cross ventilation
2 Damp barrier layer insulating the Holz100 ceiling
3 Holz100 Ceiling according to static requirements
4 Holz100 mounting joist fitted directly to the Holz100 ceiling
5 Holz100 Wall System, according to static and building-physics requirements.

Joining an inserted ceiling, upper floor External wall - Corner

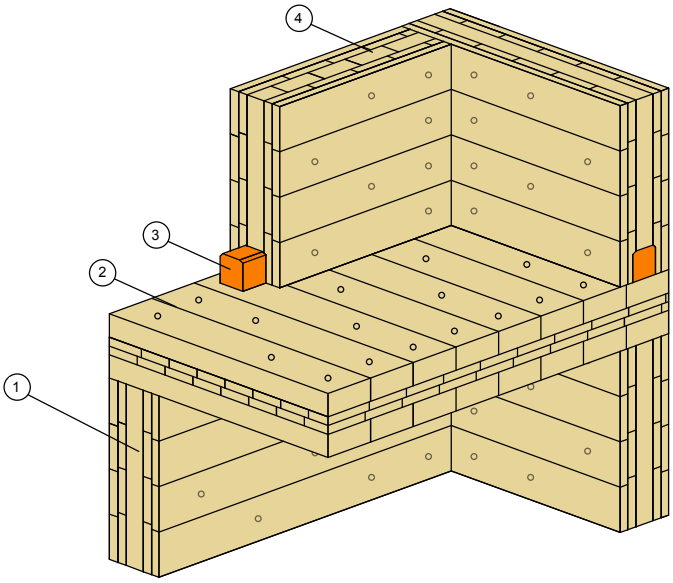

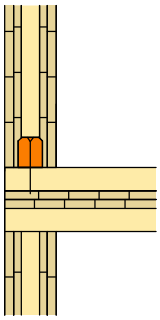

1 Thoma Holz100 wall system, according to static and building-physics requirements.
2 Holz100 ceiling according to static requirements
3 Holz100 Mounting joist fitted directly to the Holz100 ceiling
4 Holz100 Wall System, according to static and building-physics requirements

Joining and inserted ceiling, upper floor
Joining to internal wall

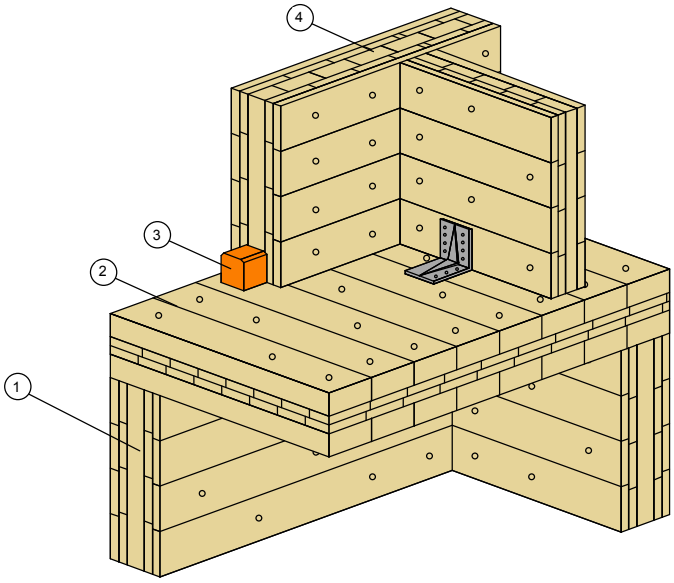

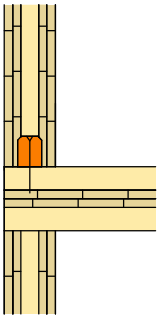

1 Thoma Holz100 Wall System, according to static and building-physics requirements
2 Holz100 ceiling according to static requirements
3 Holz100 mounting joist fitted directly to the Holz100 ceiling
4 Holz100 Wall System, according to static and building-physics requirements

4) Joining to an existing wall

Joining the ceiling via edge beam

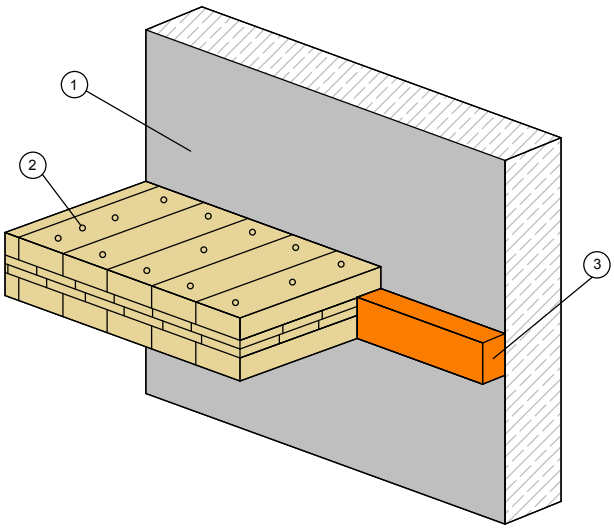

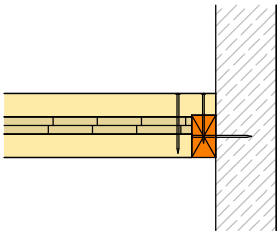

1 Existing wall
2 Holz100 Ceiling system screw fitted to edge beam and additional support enforcement
3 Edge beam screw fitted to existing wall

Joining the wall via mounting beam

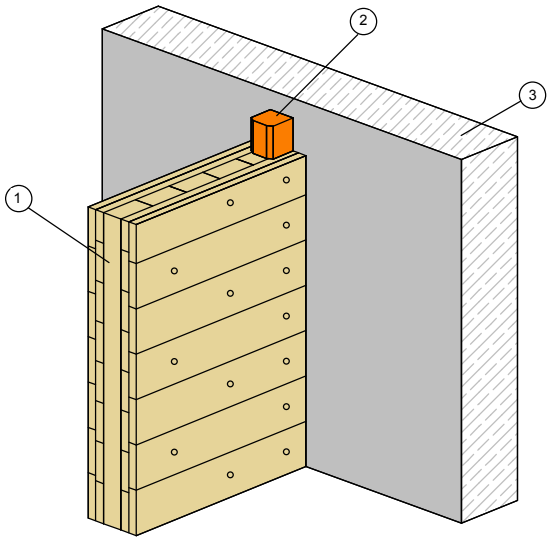

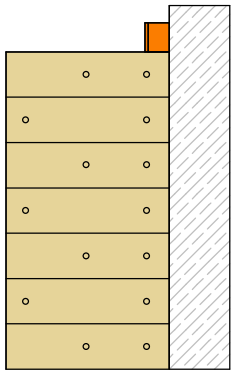

1 Existing wall
2 Holz100 Wall System screw fitted to mounting beam
3 Mounting beam screw fitted to existing wall

5) Ceiling supported on bearers

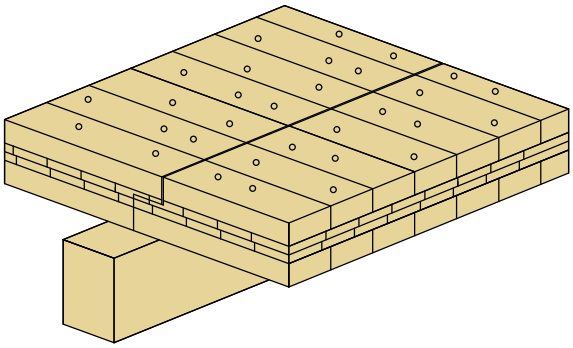

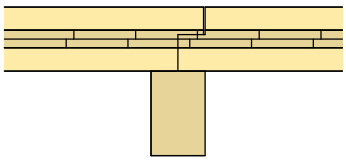

1 Wooden bearer
2 Thoma H100 Ceiling System

Parts Catalogue

3. Constructions

3.1 External Wall

3.2 Description

Part AW01

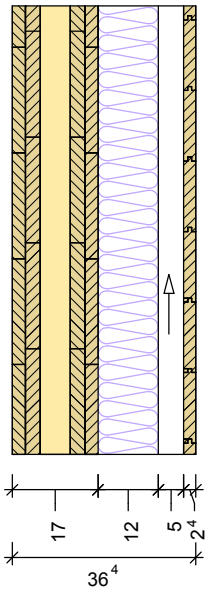

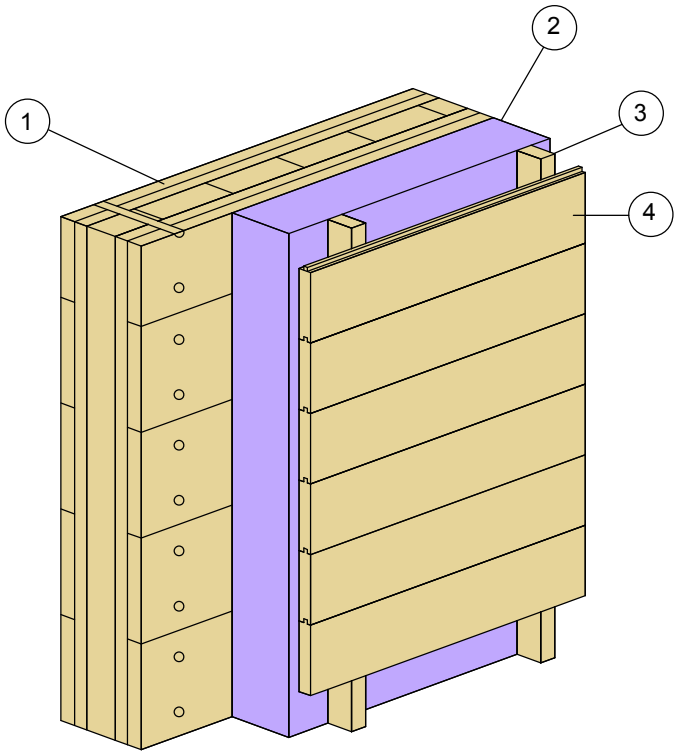

Layers

Item	Thickness (cm)	Description
01	17.0	Thoma H100-W17
02	12.0	Soft wood fiber with tongue and groove
03	5.0	Ventilation slats vertical
04	2.4	External
36.4		Structure

Construction AW02

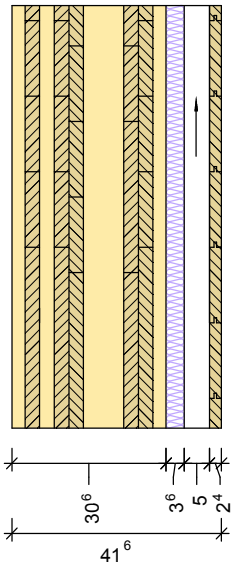

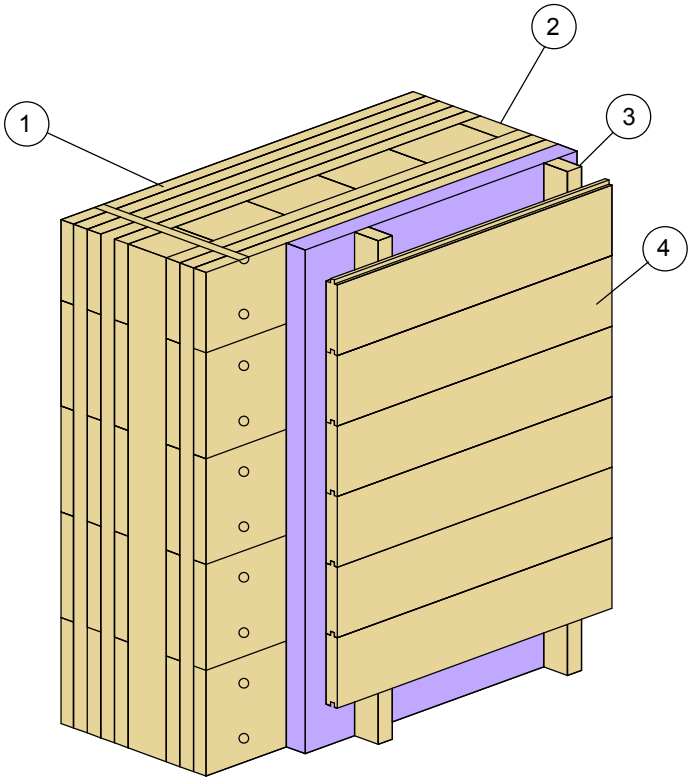

Layers

Item	Thickness (cm)	Description
01	30.6	Thoma H100-W30
02	3.6	Soft wood fiber with tongue and groove
03	5.0	Ventilation slats, vertical
04	2.4	External
	41.6	Structure

Construction AW03

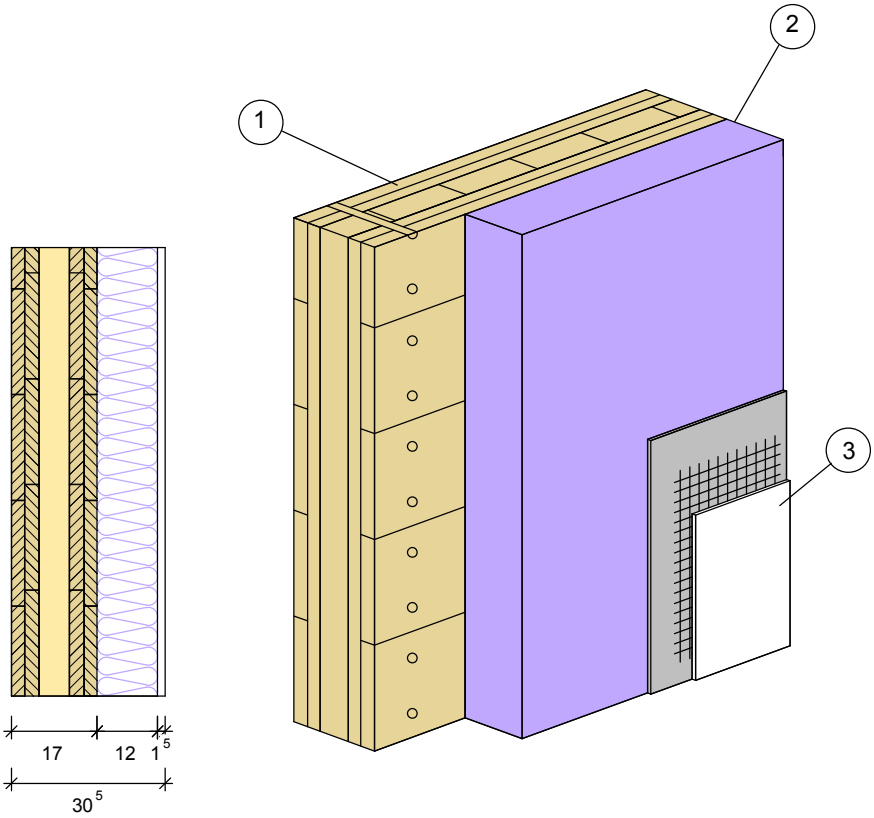

Layers

Item	Thickness (cm)	Description
01	17.0	Thoma H100-W17
02	12.0	Soft wood fiber with tongue and groove
03	1.5	External Formwork
	30.5	Complete Structure

Construction AW04

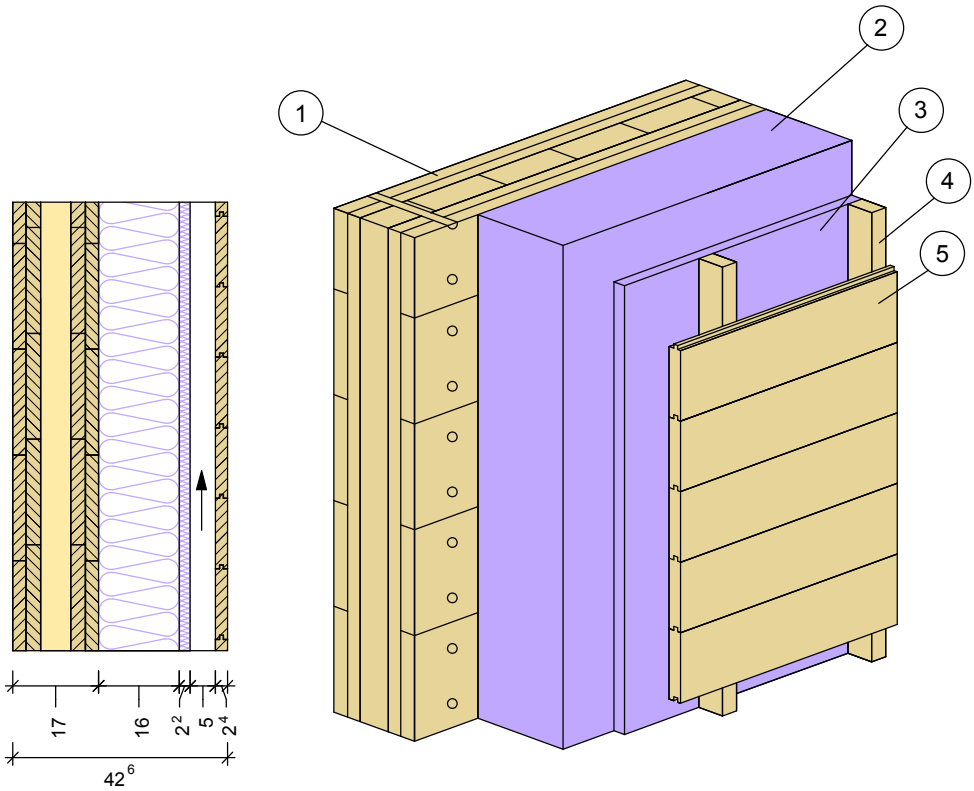

Layers

Item	Thickness (cm)	Description
01	17.0	Thoma H100-W17
02	16.0	Soft wood fiber
03	2.2	Soft wood fiber with tongue and groove
04	5.0	Ventilation (vertical)
05	2.4	External formwork
	42.6	Structure

Construction AW05

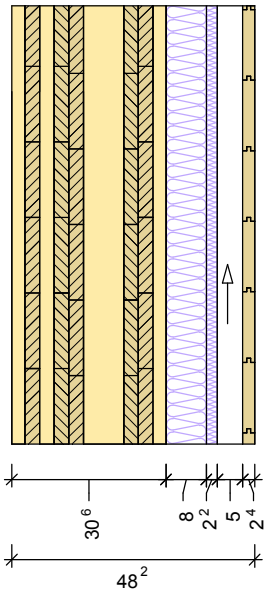

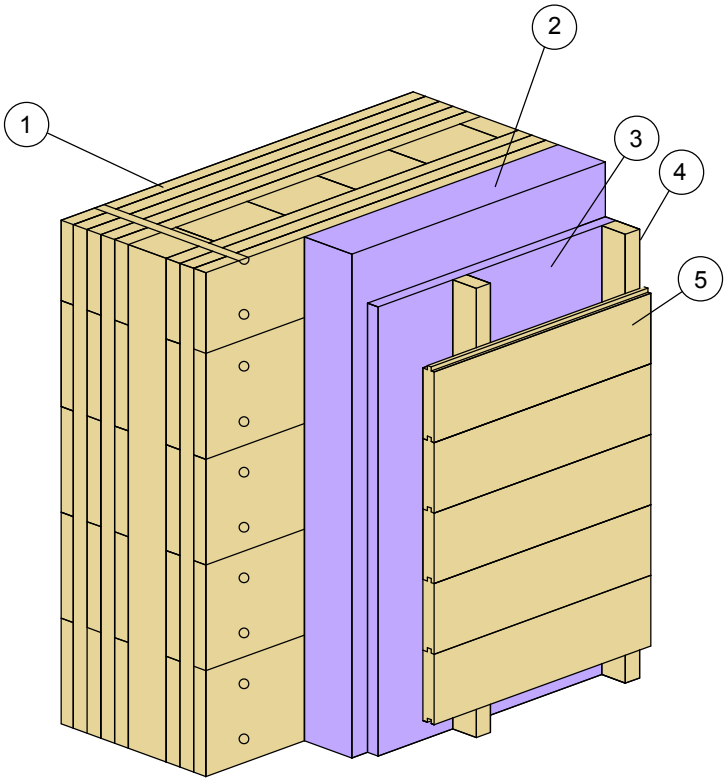

Layers

Item	Thickness (cm)	Bezeichnung
01	30.6	Thoma H100-W30
02	8	Soft wood fiber
03	2.2	Soft wood fiber with tongue and groove
04	5.0	Ventilation (vertical)
05	2.4	External formwork
	48.2	Structure

3.2 Inserted Ceilings

Construction DE01

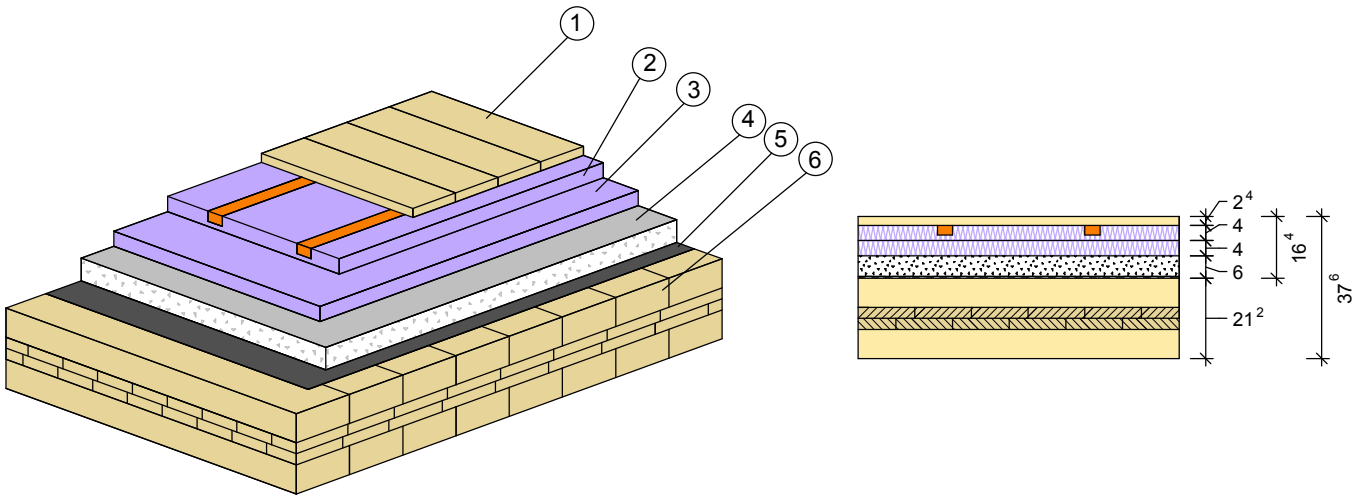

Layers top to bottom

Item	Thickness (cm)	Description
01	2.4	Thoma solid wood floorboards
02	4.0	Interlocking soft wood fiber board
03	4.0	Soft wood fiber
04	6.0	Filler
05	-	Trickle protection sheet
06	21.2	Thoma H100-DE21
	37.6	Structure

Construction DE02

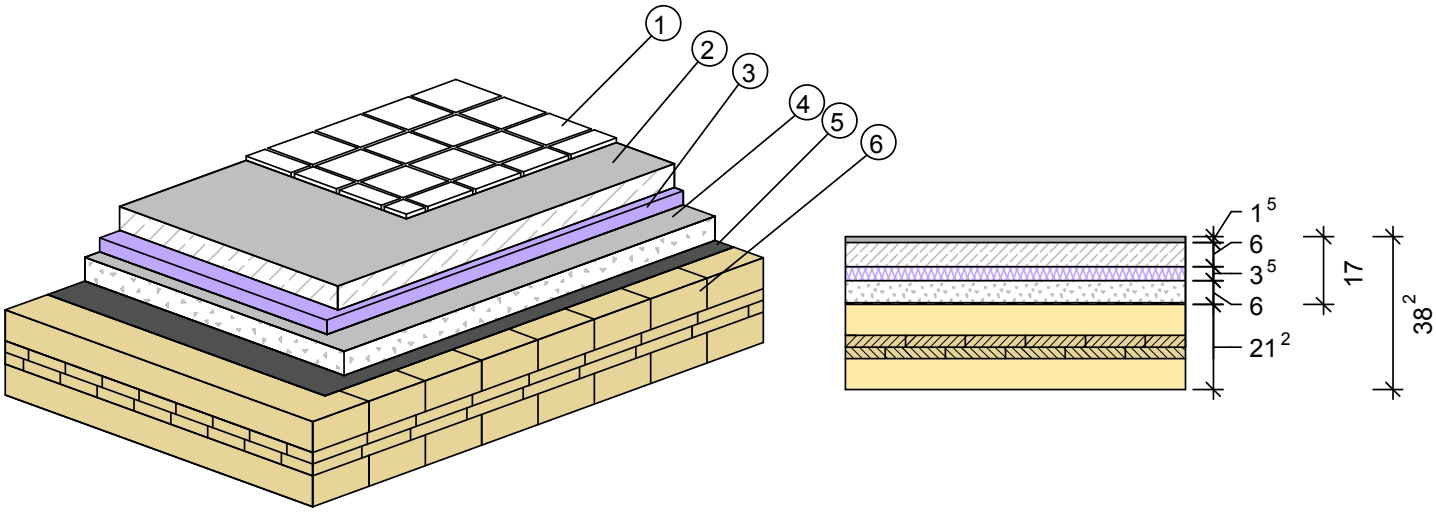

Layers top to bottom

Item	Thickness (cm)	Bezeichnung
01	2.0	Tiles
02	6.0	Screed
03	3.5	Sound-Insulation
04	6.0	Filler
05	-	Separating paper
06	21.2	Thoma H100-DE21
	38.7	Structure

Construction DE03

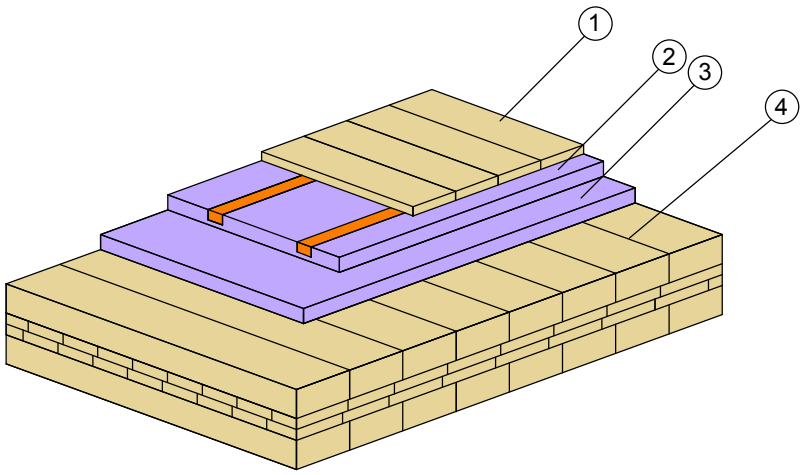

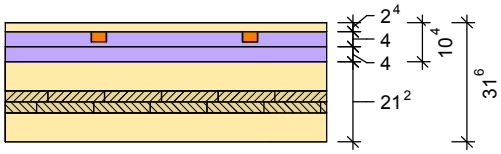

Layers top to bottom

Item	Thickness (cm)	Description
01	2.4	Thoma solid wood floorboards
02	4.0	Interlocking soft wood fiber board
03	4.0	Softwood-fiber
04	21.2	Thoma H100-DE21
31.6		Complete Structure

3.4 Pitched roof

Construction DA01

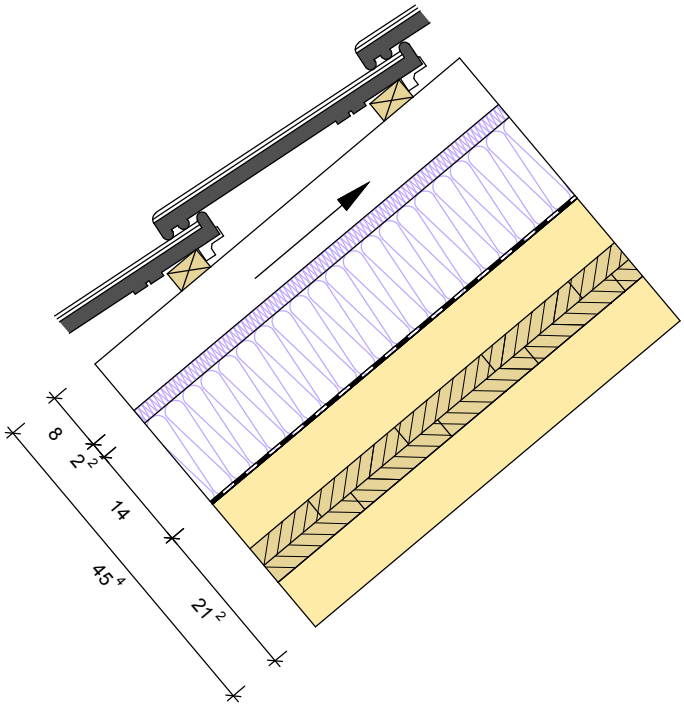

Layers top to bottom

Item	Thickness (cm)	Description
01	-	Tiles
02	-	Battens
03	8.0	Ventilation
04	2.2	Soft wood fiber - wood-bearing layer
05	14.0	Soft wood fiber
06		Vapor barrier
07	21.2	Thoma H100-DE21
	45.4	Structure

Thoma Holz100 Canada

Construction DA02

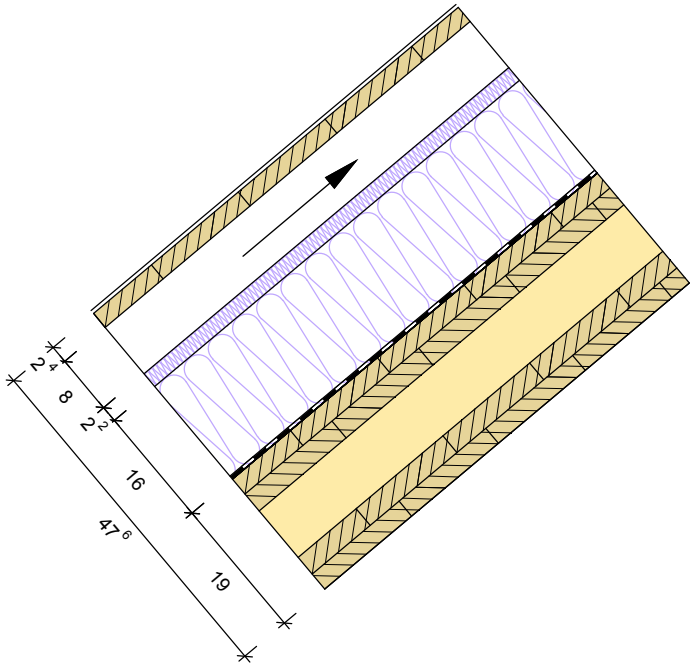

Layers top to bottom

Item	Thickness (cm)	Description
01	-	Sheet metal covering
02	2.4	Rough Shuttering
03	8.0	Ventilation/counter
04	2.2	Soft wood fiber - water-bearing layer
05	16.0	Softwood-fiber
06		Vapour-barrier
07	19.0	Thoma H100-DA19
	47.6	Structure

3.5 Flat Roof

Construction DA03

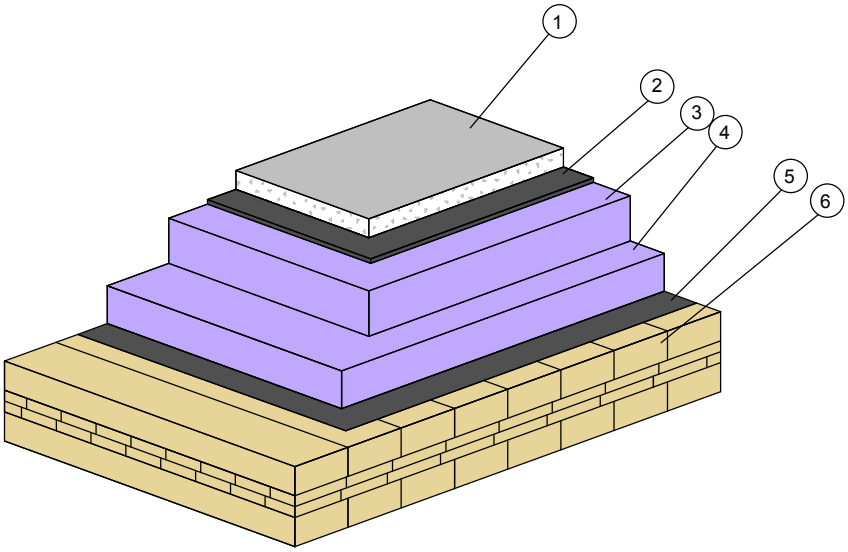

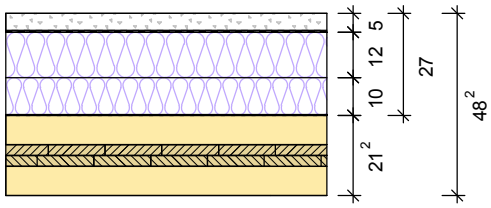

Layers top to bottom

Item	Thickness (cm)	Description
1	5.0	Gravel
2	-	Roof waterproofing membrane
3	12.0	Soft wood fiber pitch insulation
4	10.0	Softwood-fiberpanel
5	-	Vapour barrier
6	21.2	Thoma H100-DE21
	48.2	Structure

4. Installation

The planning of installations, both for electric wiring and water pipes plays an important role when constructing a solid wood house. As a standard, the Holz100 parts are manufactured in high visual quality. Should it be required for a wall or a ceiling surface to keep its Holz100 look, grooves and openings for installations are milled into the wood by the manufacturer.

Planning:
Thoma has a Planning Department who draw the Holz100 working plans, and resulting from that is also the work preparation plans required for the Holz100 production.

We always incorporate the client's designs into our planning.

Should installations be drawn on the plan before it's handed in, we suggest the following plan layout:

Layout presentation: As a standard, installation grooves are milled into the core layer of a Holz100 wall.

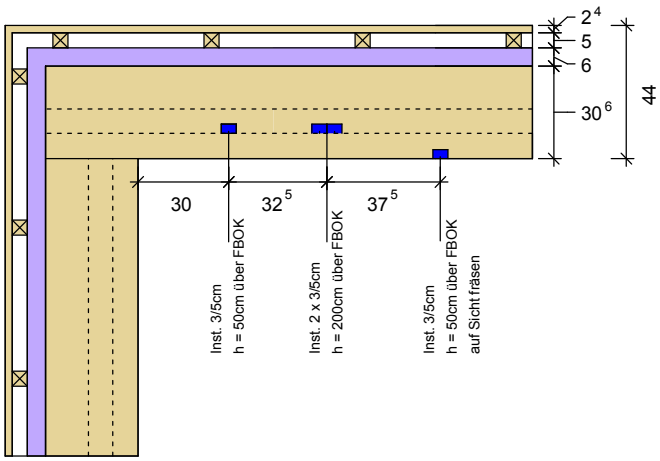

Parts Catalogue

Installations System Overview

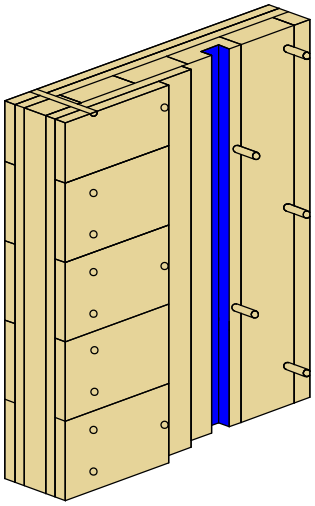

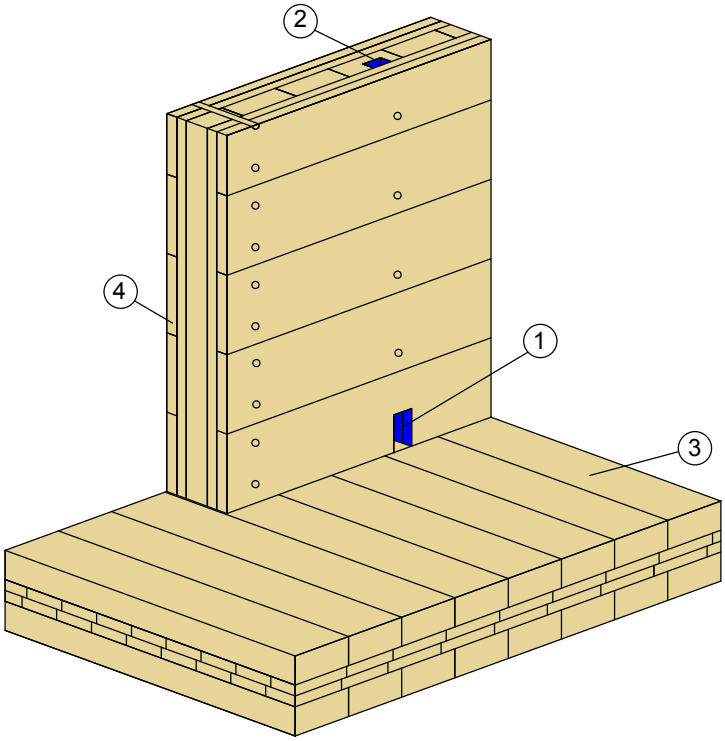

1) **The planned installation duct is cut out by the manufacturer in the floor area**
2) **Standard installation groove 3/5 cm**
3) **Holz100 Ceiling System**
4) **Holz100 Wall System**

Standard Installation

milled at factory, size 3/5 cm

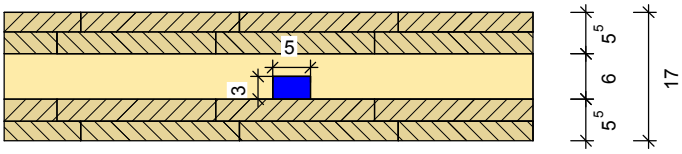

Double Installation

milled at factory, size 3/10 cm

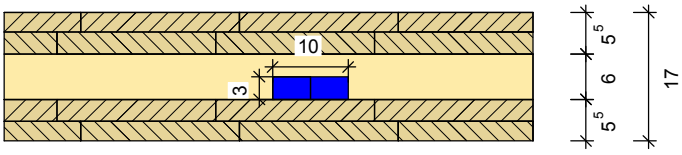

Grooves milled for visual quality

Can be done on site of assembly, any size within the surface layers

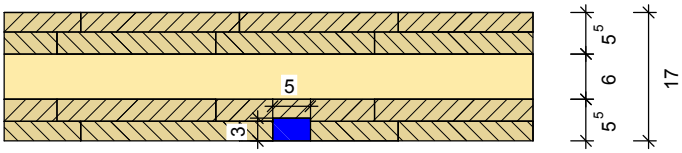

5. Detail

05.01 Version 17cm Holz100 Wall with 12 cm wood fiber insulation

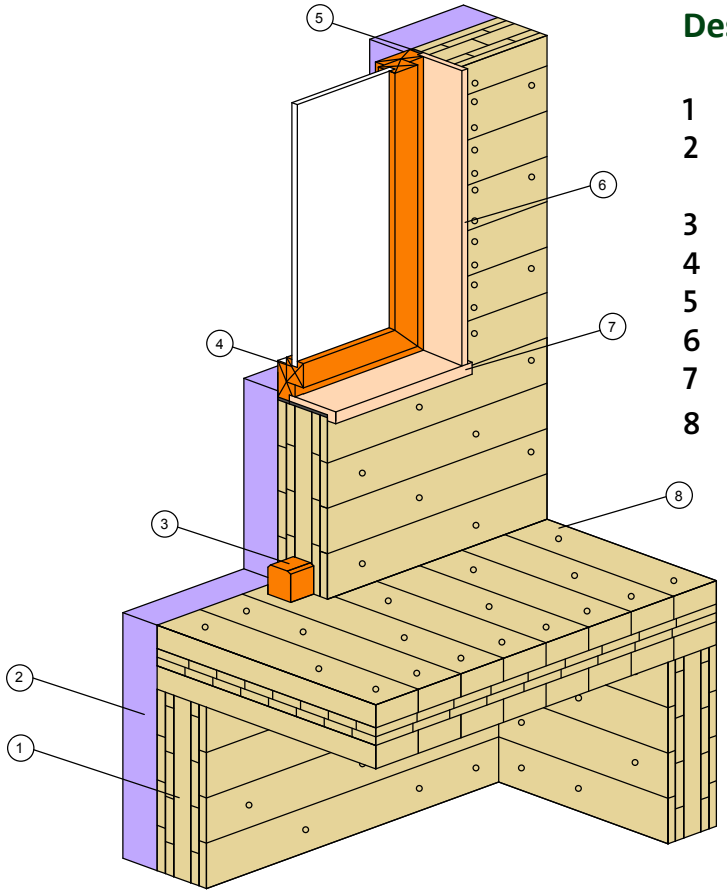

Description

1 Holz100 Outer wall 17 cm
2 Soft wood fiber insulation, at least 3 cm above the floor
3 Mounting joist
4 Wooden window frame
5 Eco-windproofing system
6 Dressing board (folded in the windowsill)
7 Sill
8 Holz100 Ceiling

Horizontal Cross-section

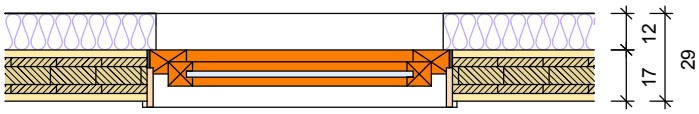

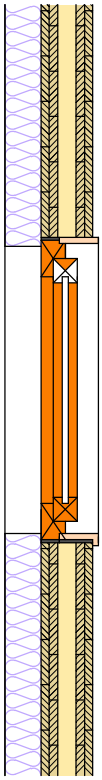

Vertical Cross-section

05.02 Version 30.6 cm Holz100 Wall

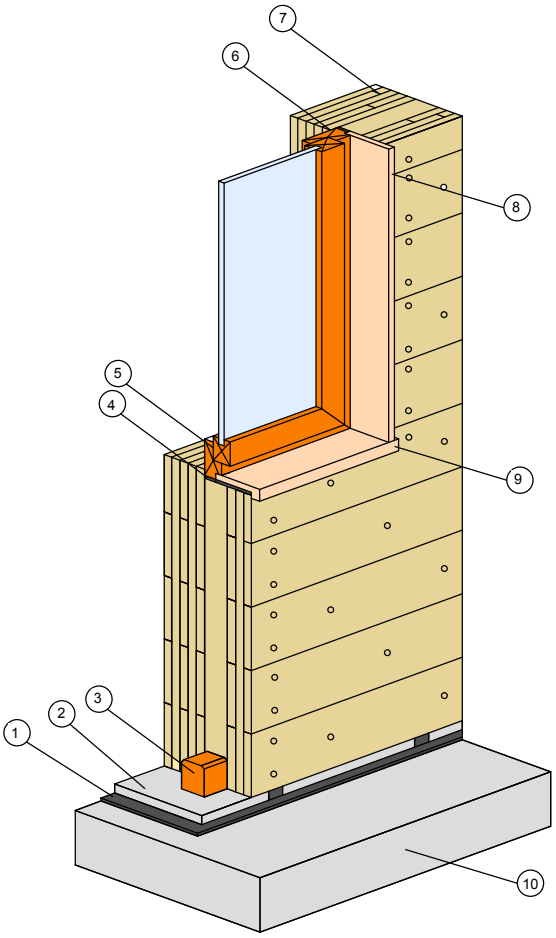

Description

1 Moisture separation against ascending humidity
2 Mortar bed with insulating leveled stabilizer (against raising clamp)
3 Mounting joist
4 Eco windproofing material
5 Wood window frame
6 Holz100 Wall milled in (for window fitting)
7 Holz100 outer wall 30.6 cm
8 Dressing board (folded into window sill)
9 Windowsill
10 Slab of concrete floor

Horizontal Cross-section

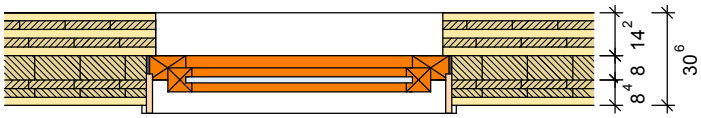

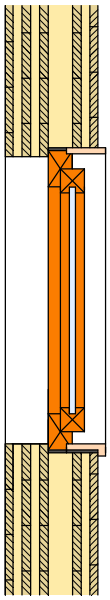

Vertical Cross-section

05.03 Version 20 cm Holz100 Wall with window in insulation layer

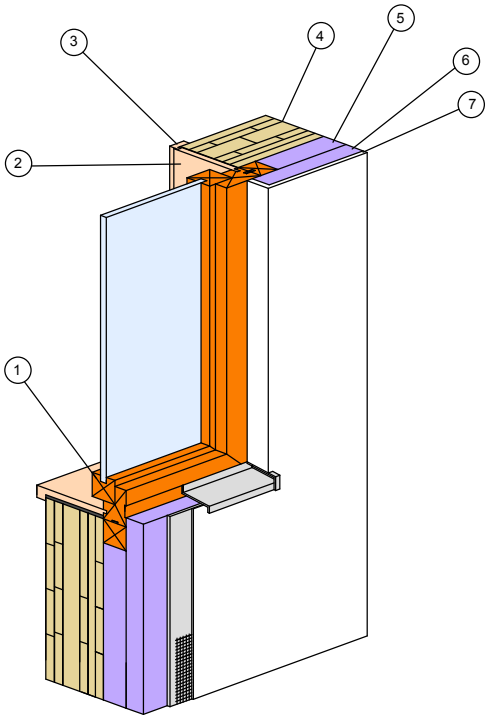

Description

1	Wooden window frame
2	Dressing board
3	Cession board
4	Holz100 outer wall 20 cm
5-6	Soft wood board
7	Diffusion-open system plaster
8	Solid larch windowsill Surface: oiled and waxed
9	Aluminum windowsill
10	Eco windproof material

Horizontal Cross-section

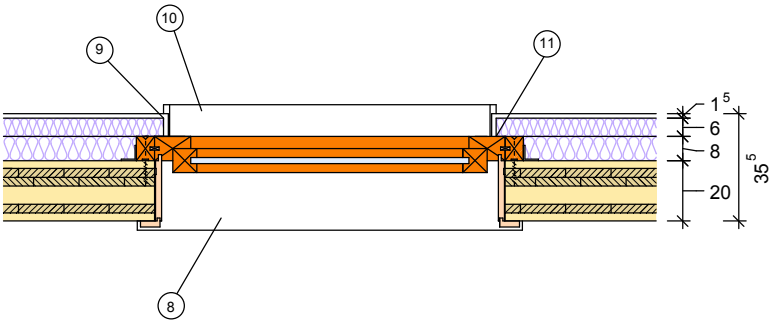

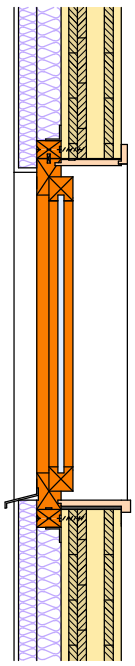

Vertical Cross-section

05.04 Details for a roller blind box connection

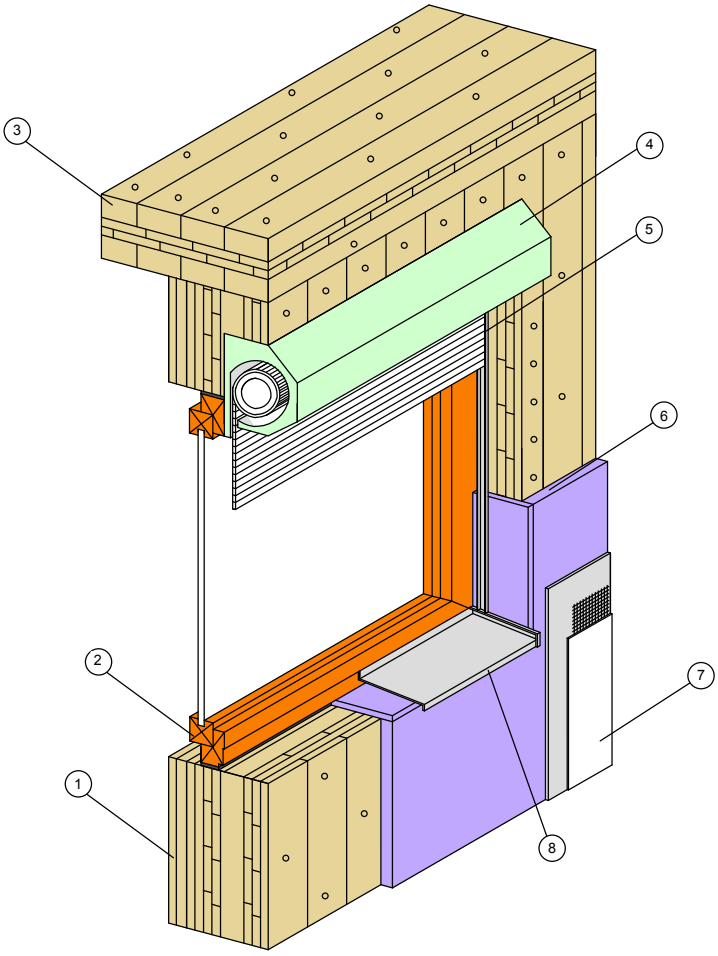

Description

1 Holz100 outer wall 30.6 cm
2 Window connected to RAL
3 Holz100 ceiling 21.2 cm
4 Roller blind box according to the manufacturer depends on the size of window
5 Guide rail for the awning
6 Soft wood fiber board as plaster carrier
7 System plaster (specified by manufacturer)
8 Metal windowsill



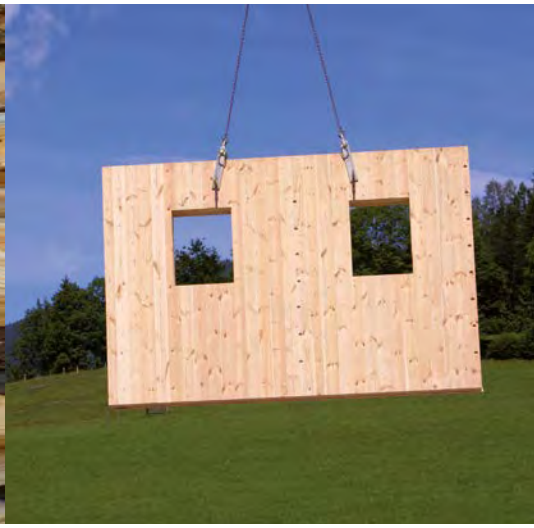

IMPRESSUM

The content of this component catalog is the intellectual property of Ing. Erwin Thoma and is protected by copyright. The system solutions are recommendations that the publisher assumes no liability for. Reproduction may only be made with the written consent of the publisher. The component catalog is only valid in the collected work.

Ing. Erwin Thoma Holz GmbH
Version April 2017